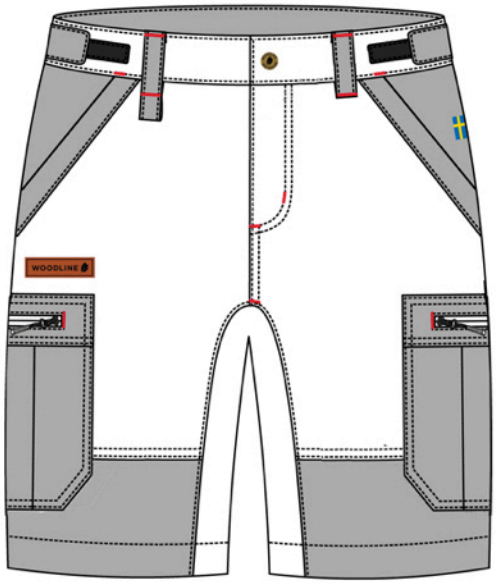

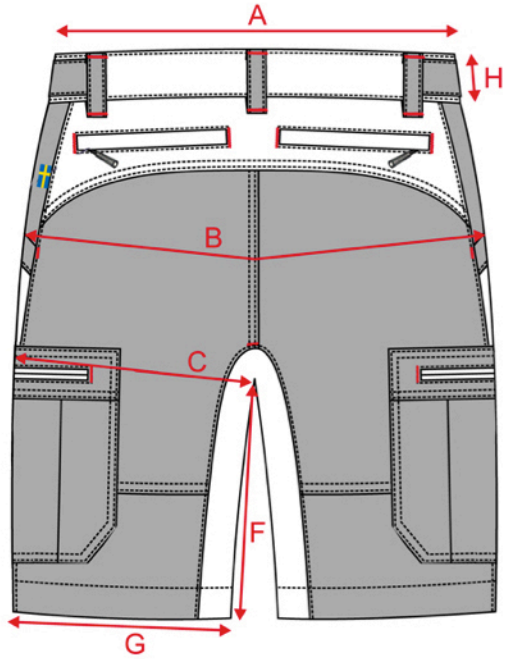

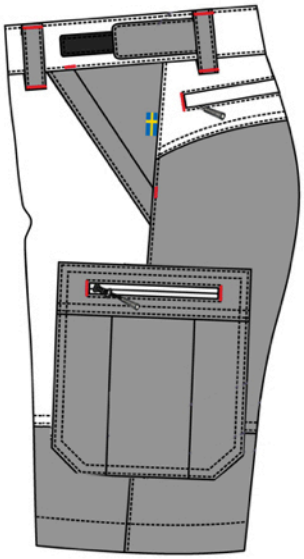

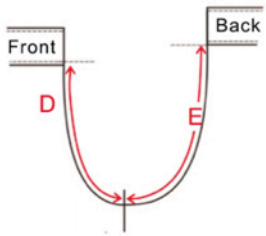

Code	Concepts	XS/46	S/48	M/50	L/52	XL/54	2XL/56	3XL/58	4XL/60
A	½ Waist	41	43	45	47	50	52	55	58
B	½ Seat	48	50	52	54	56	58	61	64
C	½Thigh	32.5	33.5	34.5	35.5	36.5	37.5	39	40.5
D	Frontrise excl wb	21.5	22	22.5	23	23.5	24	24.5	25
E	Backrise excl wb	33	34	35	36	37	38	39	40
F	Inseam	24	24	25	25	26	26	27	27
G	½Bottom hem	25	25	26	26	27	27	28	28
H	Wb height	5	5	5	5	5	5	5	5